Modular Printing Technology

Helping You Deliver Value

Makoto Aruga

March 24, 2021

Memjet Confidential

Who Are We

Memjet® is a leading innovator and supplier of Thermal Printhead technology, module components and inks to OEM partners for MFP, commercial, labels and packaging printing applications.

© 2021 Memjet

memjet
DELIVERING BEAUTIFUL PRECISION,
SIMPLICITY, AND AFFORDABILITY

© 2021 Memjet

Memjet's Global Impact

12,000+
SYSTEMS INSTALLED

15+
YEARS OF R&D

THOUSANDS
OF PATENTS GRANTED

© 2021 Memjet

Brief Technology Overview

DuraFlex® and DuraLink®

© 2021 Memjet

New Core Technology Platform

- Major investment in new core technology platform
- Optimized technology for application needs

New core printing technology platform

- New thermal inkjet MEMs devices
- New pigment ink technology

DuraLink

- **1-color modular** printhead system for high-speed commercial printing

DuraFlex

- **4-color** printhead system for multiple markets across desktop, labels, mini- press and lower volume, cost-sensitive wide format applications

© 2021 Memjet

DURAFLEX®

- Multicolor A4 and A3+ long-life printheads
- A3+ printheads stitchable
- Speeds of up to 150 fpm (46 m/min)
- Durable market-leading print quality up to 1600 x 1600 dpi
- Redundant nozzle for all 4 colors improves print quality
- Light industrial print – MFP, commercial, Labels, Corrugate

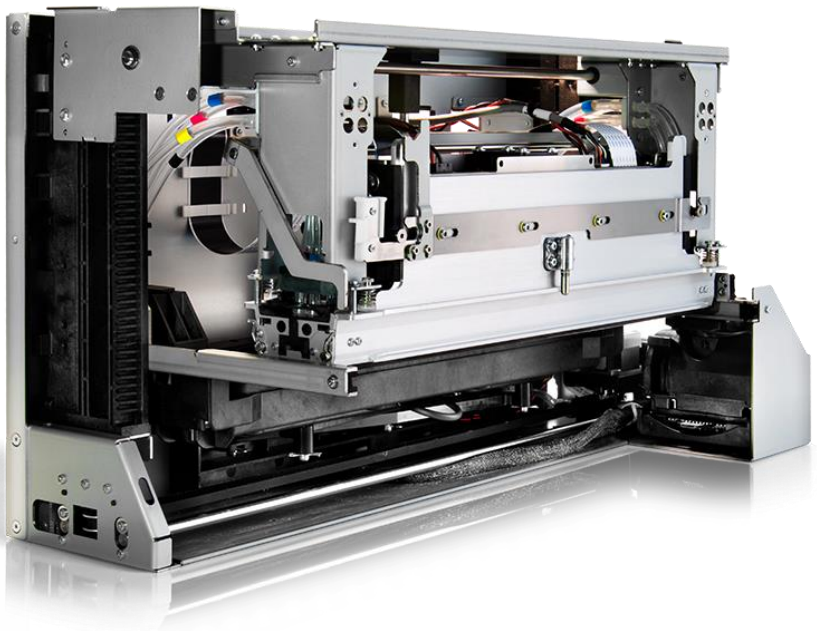

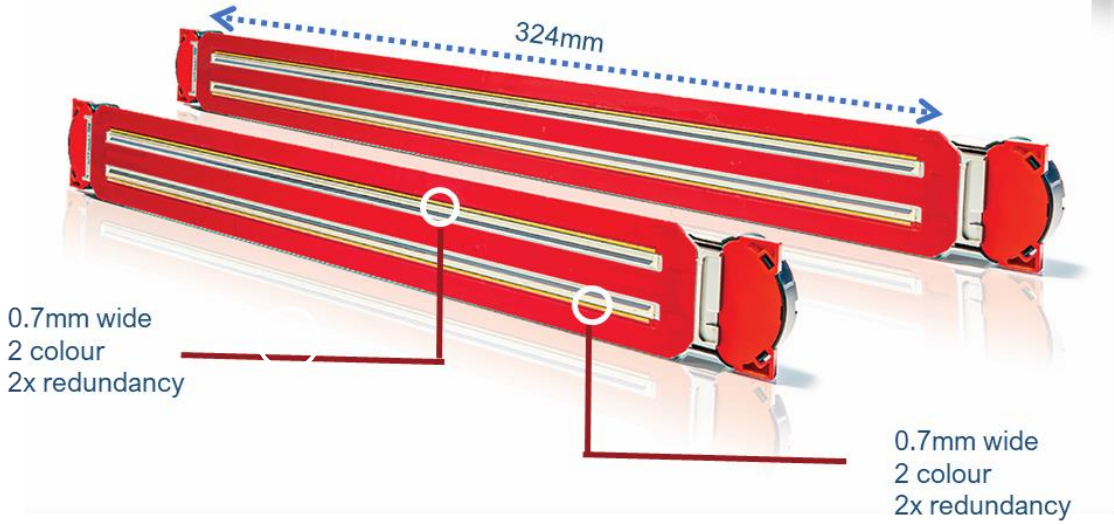

© 2021 Memjet

DURAFLEX™

© 2021 Memjet

DURALINK®

memjet®

- New thermal inkjet MEMs devices
- Longer printhead life and lower intervention rates
- New pigment ink technology with higher water and lightfastness
- High quality, offset like image quality
- High performance industrial print for commercial and packaging

Single color with 5x nozzle redundancy

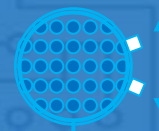

0.7mm

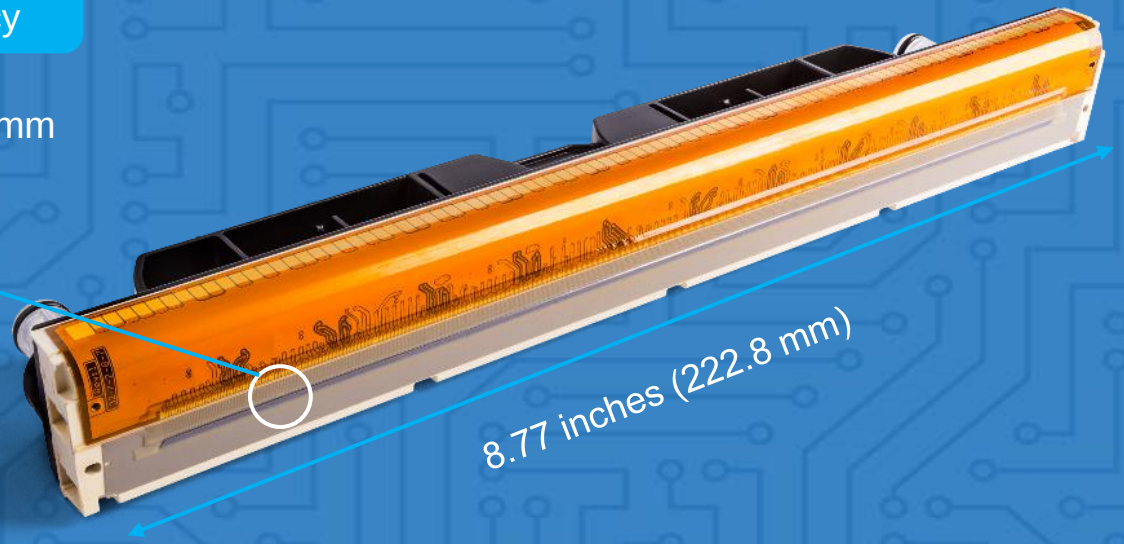

8.77 inches (222.8 mm)

- 2.1 pl
- 15.5 kHz firing frequency

DURALINK®

© 2021 Memjet

Our Partners

© 2021 Memjet

Shield M-Series Mono & Color for Book and POD Market

- High-performance **Industrial** IJ presses for **mono and color duplex** roll to roll press
- Best-in-class print resolution of **1600 x 1585** to **1600 x 790 dpi** at speed ranging from **75 mpm to 150 mpm**
- Unique **5X nozzle redundancy** securing best-in-class print quality
- Printing width up **440 - 660 mm**
- Plain paper and inkjet treated media

© 2021 Memjet

COASO iCueJet 420 for the Label Market

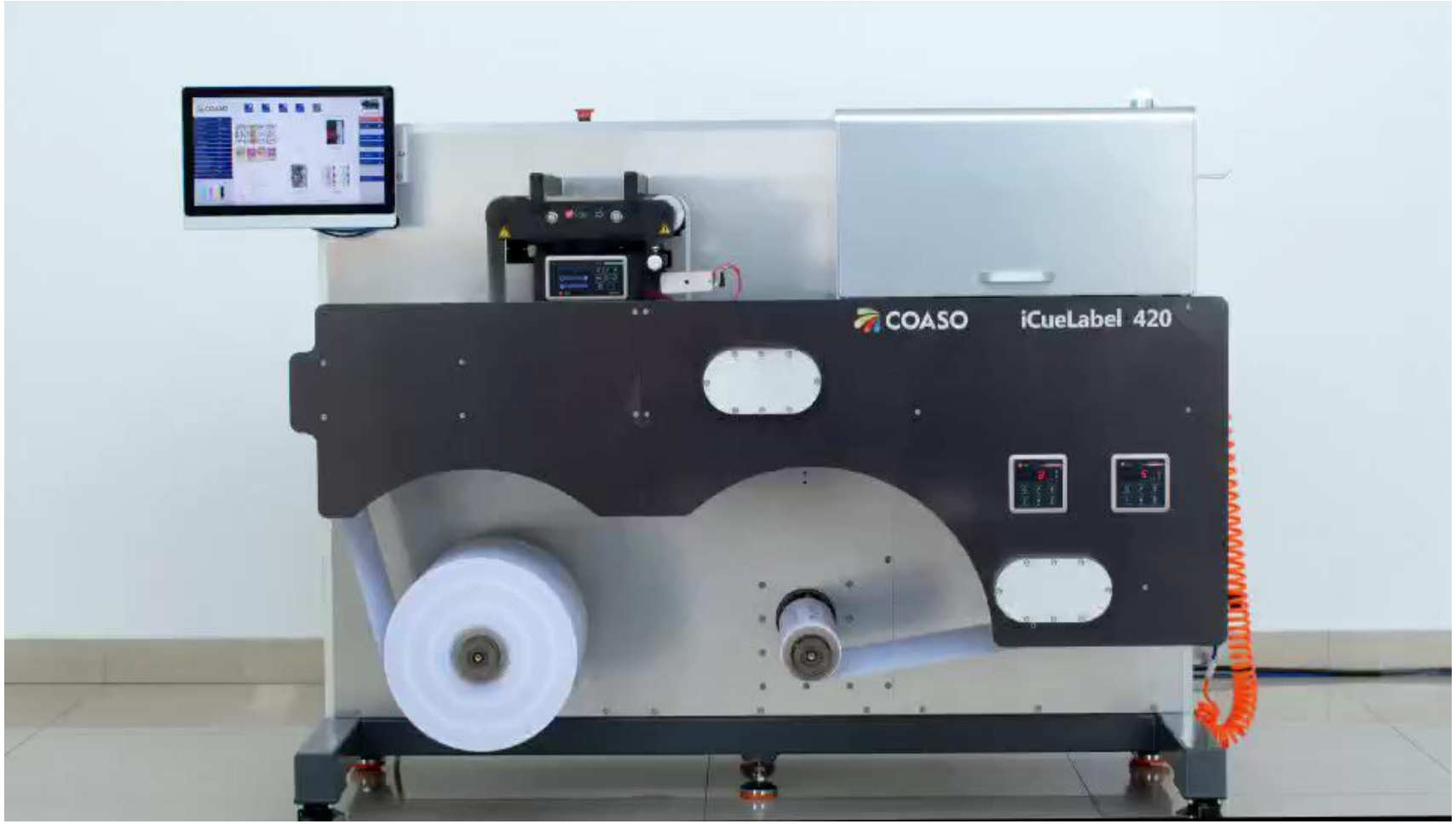

COASO DURAFLEX™

- **Industrial** performance based IJ press dedicated **for labels, semi-flexible** and **face masks**
- Best in class print resolution of **1600 x 1600 dpi at 27 mpm or 1600 x 954 dpi at 45 mpm**
- Unique **2X nozzle redundancy** securing consistent print quality
- Printing width up to **324 mm**
- **Food Safe** 4-color **pigment based ink with good water/light properties**

© 2021 Memjet

Winjet 168PE for Corrugate / Paper Bag Market

- **Light Industrial** IJ press over print for flat, raised **boxes and paper bags**
- Best in class print resolution of **1600 x 1600 dpi at 27 mpm or 1600 x 954 dpi at 45 mpm**
- Unique adjustment opportunity for print position even on stand up boxes – high flexibility
- Printing width up to **324 mm**
- **Food Safe** 4-color **pigment based ink with good water/light properties**

© 2021 Memjet

Our OEM Partners

Speed, Simplicity, Affordability, and Beautiful Precision

We are always thinking about how to enhance the work of our partners. From technical guidance to creative marketing strategies, we have helped dozens of OEMs get their product to market.

© 2021 Memjet

Product and Reseller / Distributor Interest

Our Asian and Global OEM partners are interested in working with Japanese customers and exploring representation in Japan.

For more info on our technology and partners, please contact:

Makoto.Aruga@memjet.com
Bent.Serritslev@memjet.com

Visit our Partners at: www.memjet.com

© 2021 Memjet

memjet®